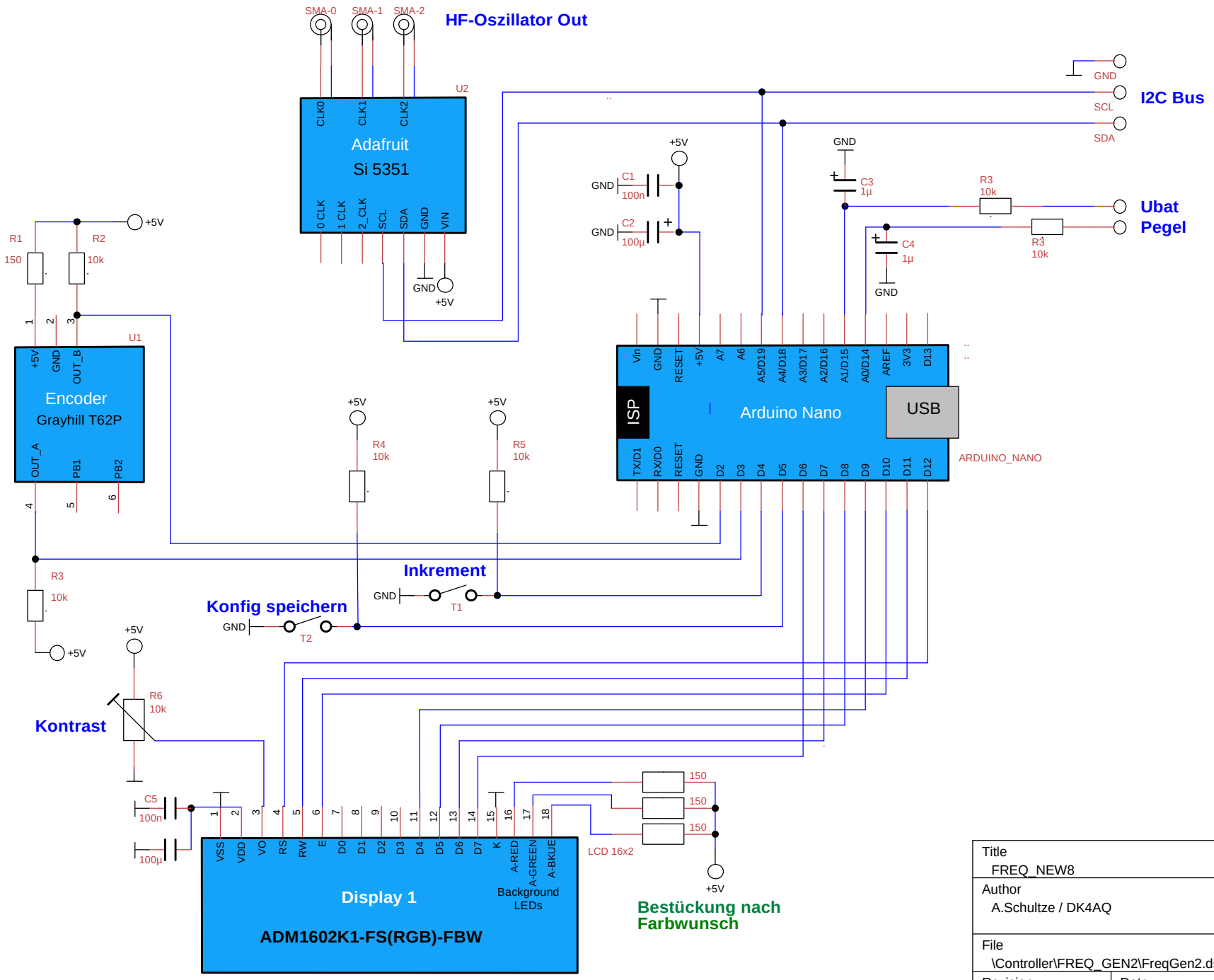

Title FREQ_NEW8		
Author A.Schultze / DK4AQ		
File \Controller\FREQ_GEN2\FreqGen2.dsn.autosave		Document freq_new8
Revision 1.0	Date 10.07.2015	Sheets 1 of 1